EGGENBERG
INDUSTRIAL TOOLS

BANDZAAGMACHINE METAAL

EBS3770-A
MANUAL

EGGENBERG
INDUSTRIAL TOOLS

EBS3770-A

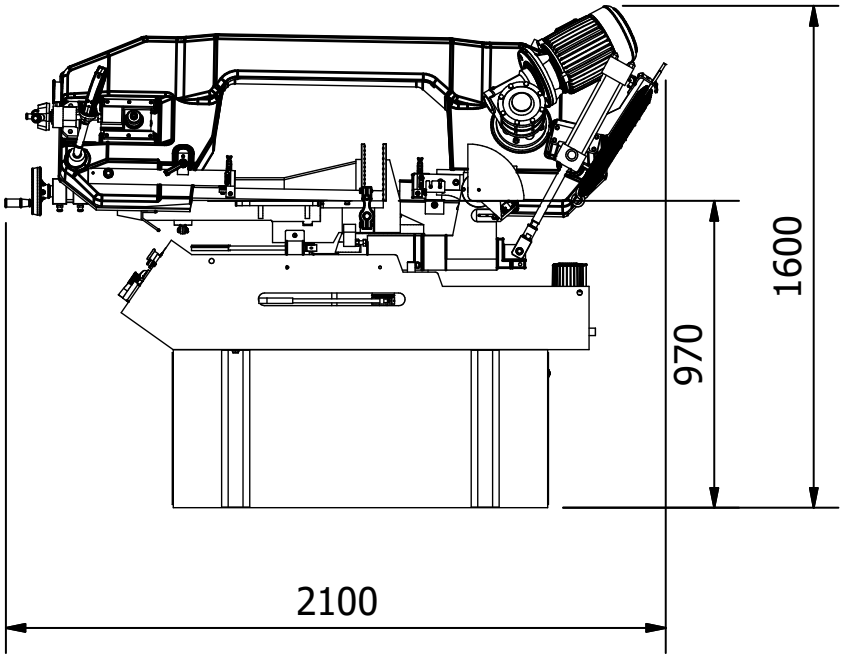

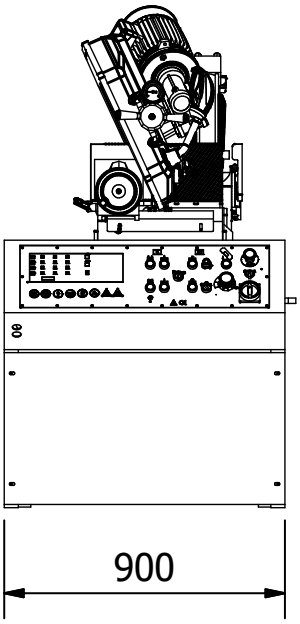

	●	■	▬
0°	355	300	H300*530MM
45°	355	290	H290*360MM
60°	240	170	H170*240MM
-45°	300	270	270MM

TECHNICAL DATA	
MOTOR	1.9 KW
COOL PUMP MOTOR	0.1KW
CUTTING SPEED (INVERTER)	20~80 (MPM)
BLADE DIMENSIONS	3770*34*1.1(MM) <6T-10T>
WORKING TABLE HIGHT	970 (MM)
N.W / G.W	645KG / 720KG
MEASUREMENTS / CUF	218CM*97CM*113CM / 86 CUF

EBS3770-A

LOAD SUSPENSION

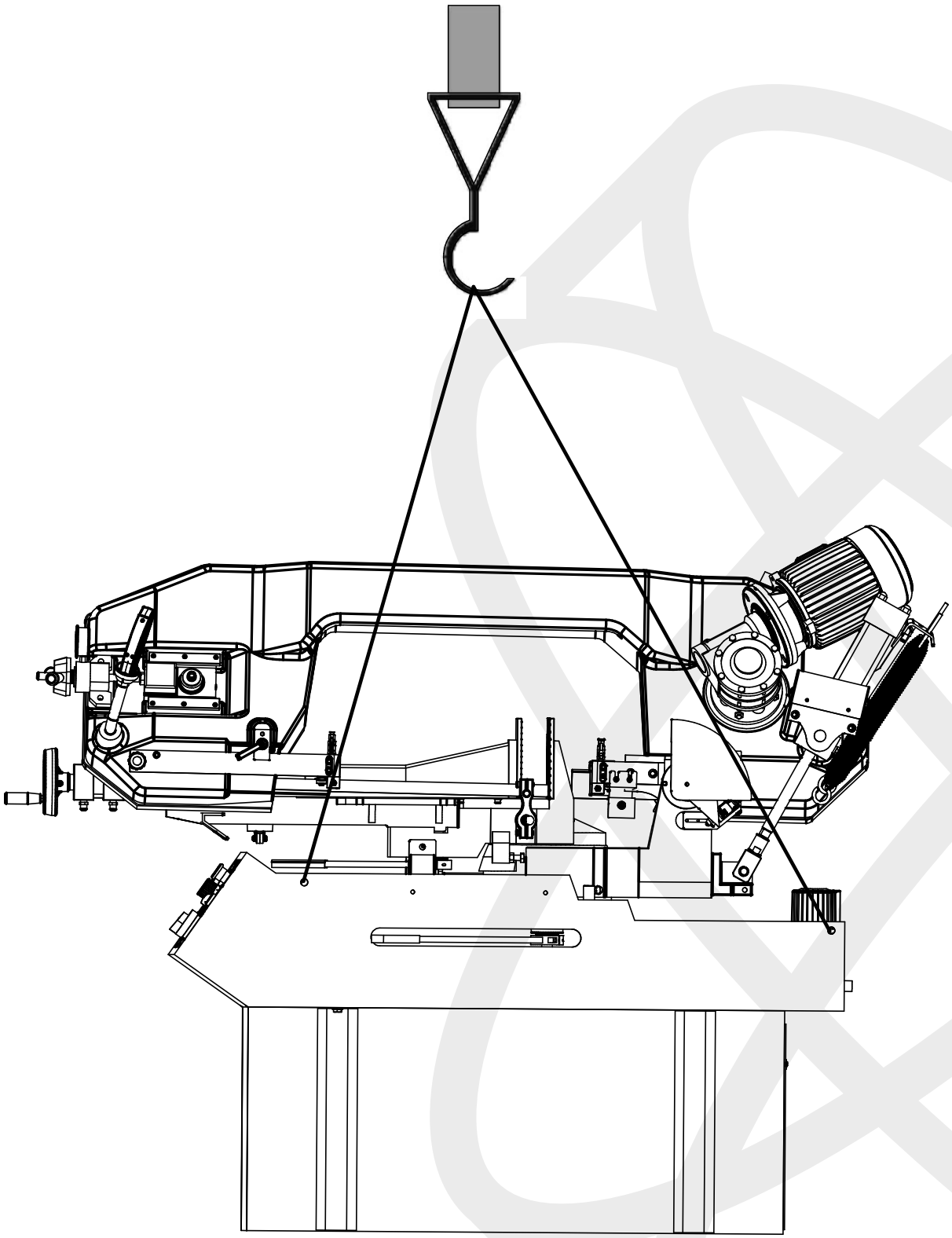

EGGENBERG
INDUSTRIAL TOOLS

EBS3

EXPLO

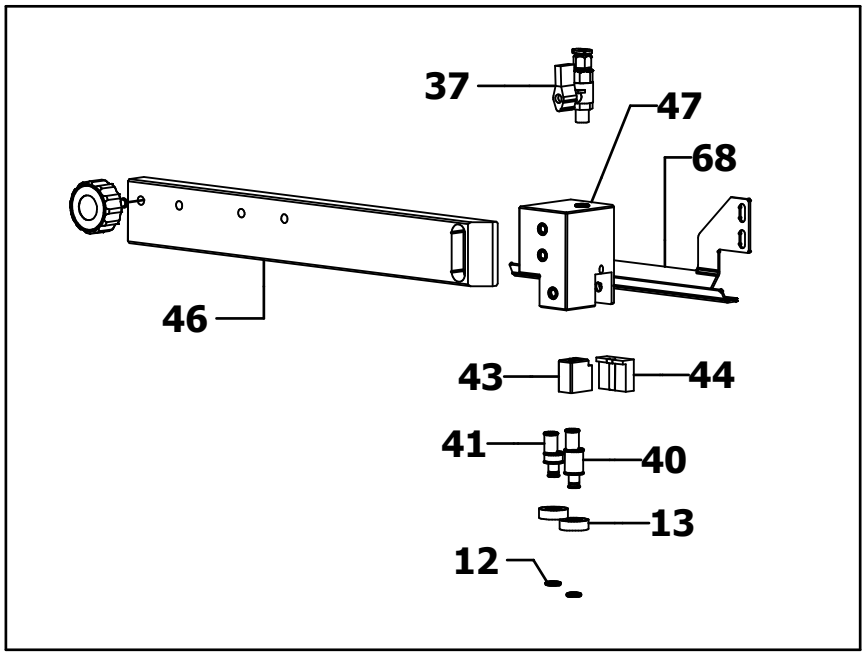
37
47
68
46
43
44
41
40
13
12

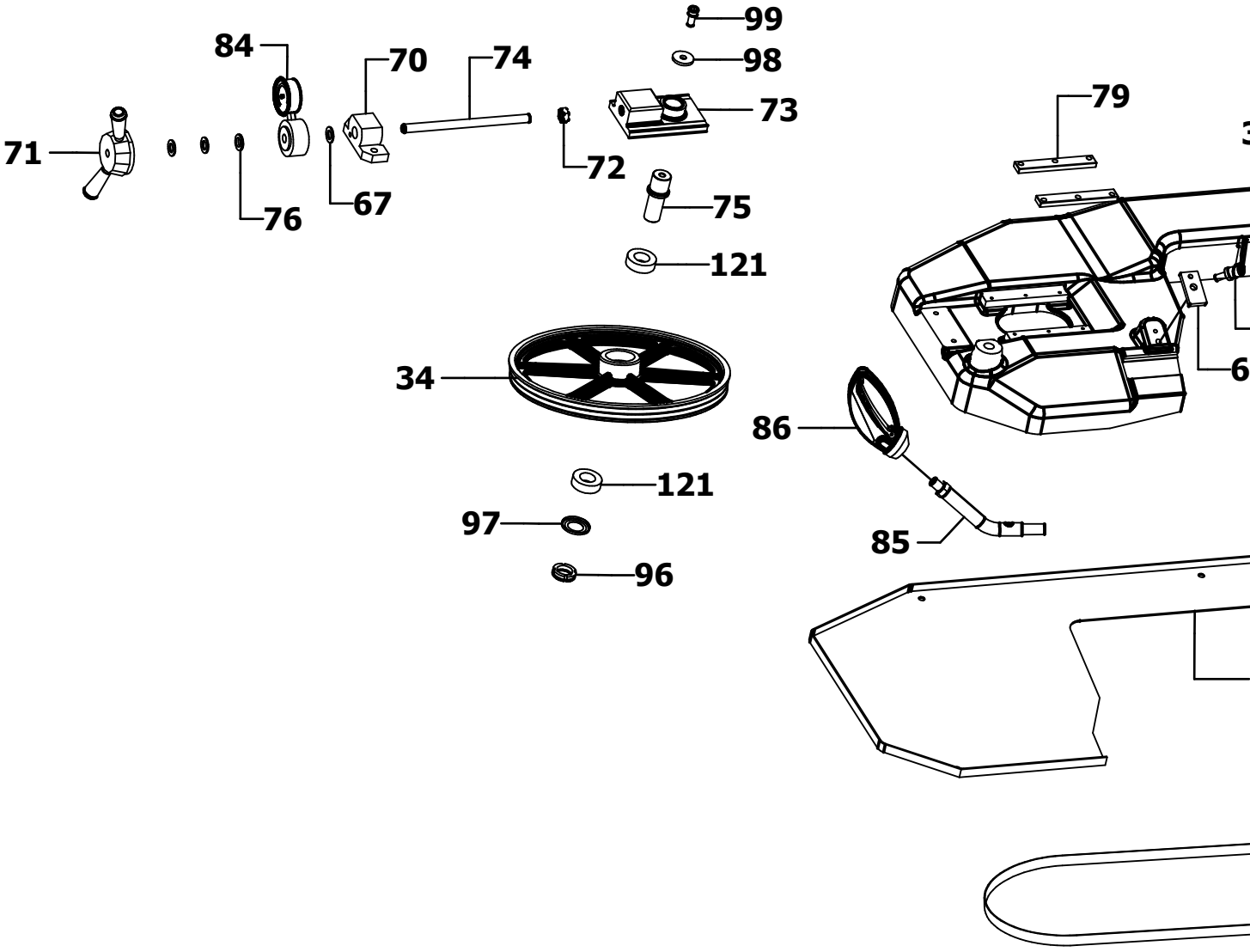
99
84
70
74
98
73
79
71
72
76
67
75
121
34
86
121
97
85
96

3770-A

ODED-1

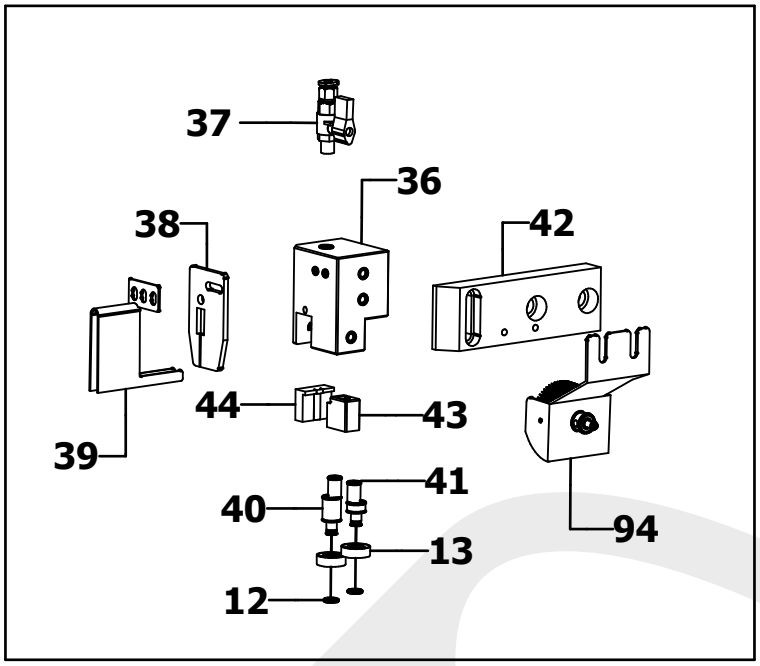

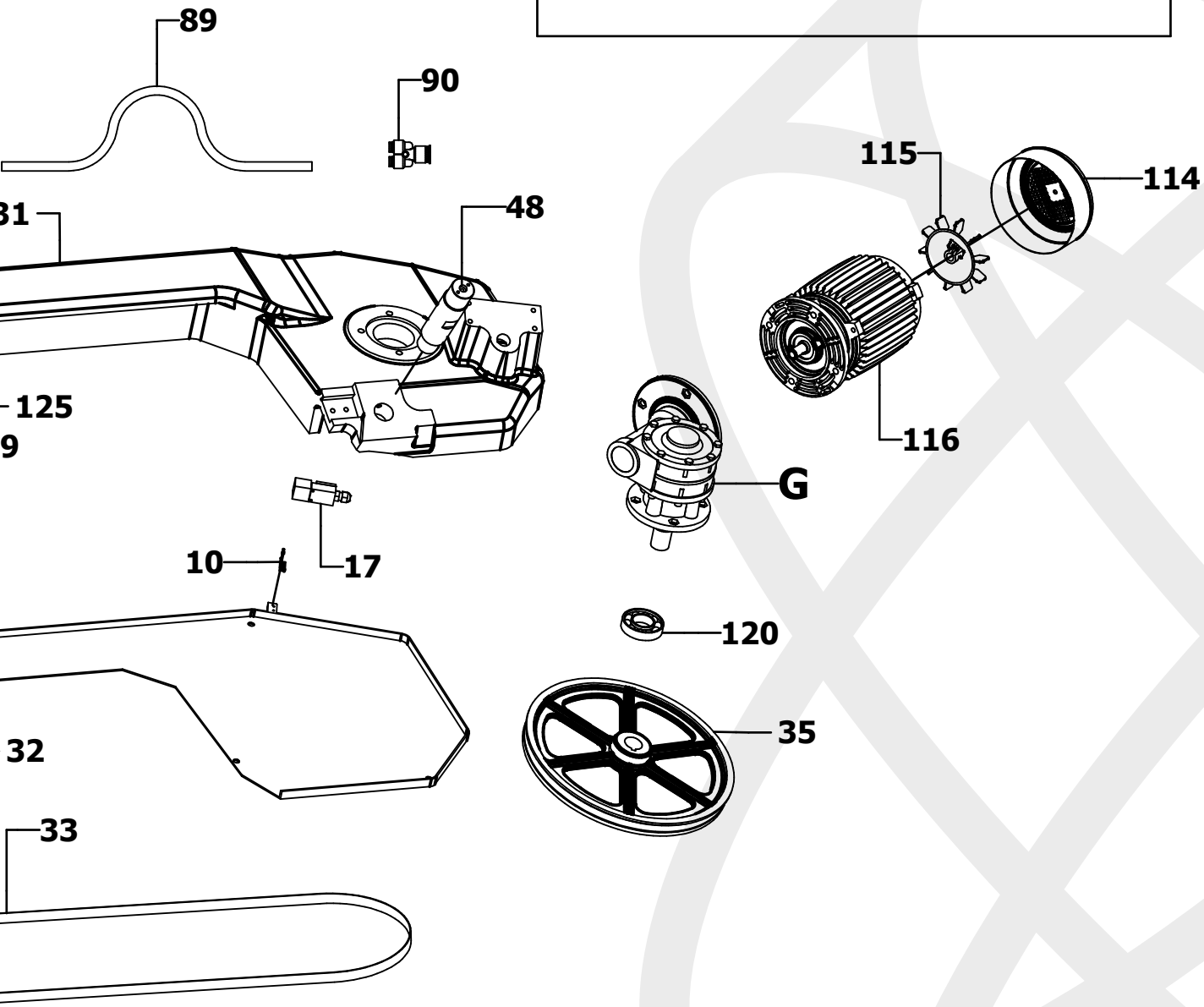

EGGENBERG
INDUSTRIAL TOOLS

EBS3770-A

EXPLODED-2

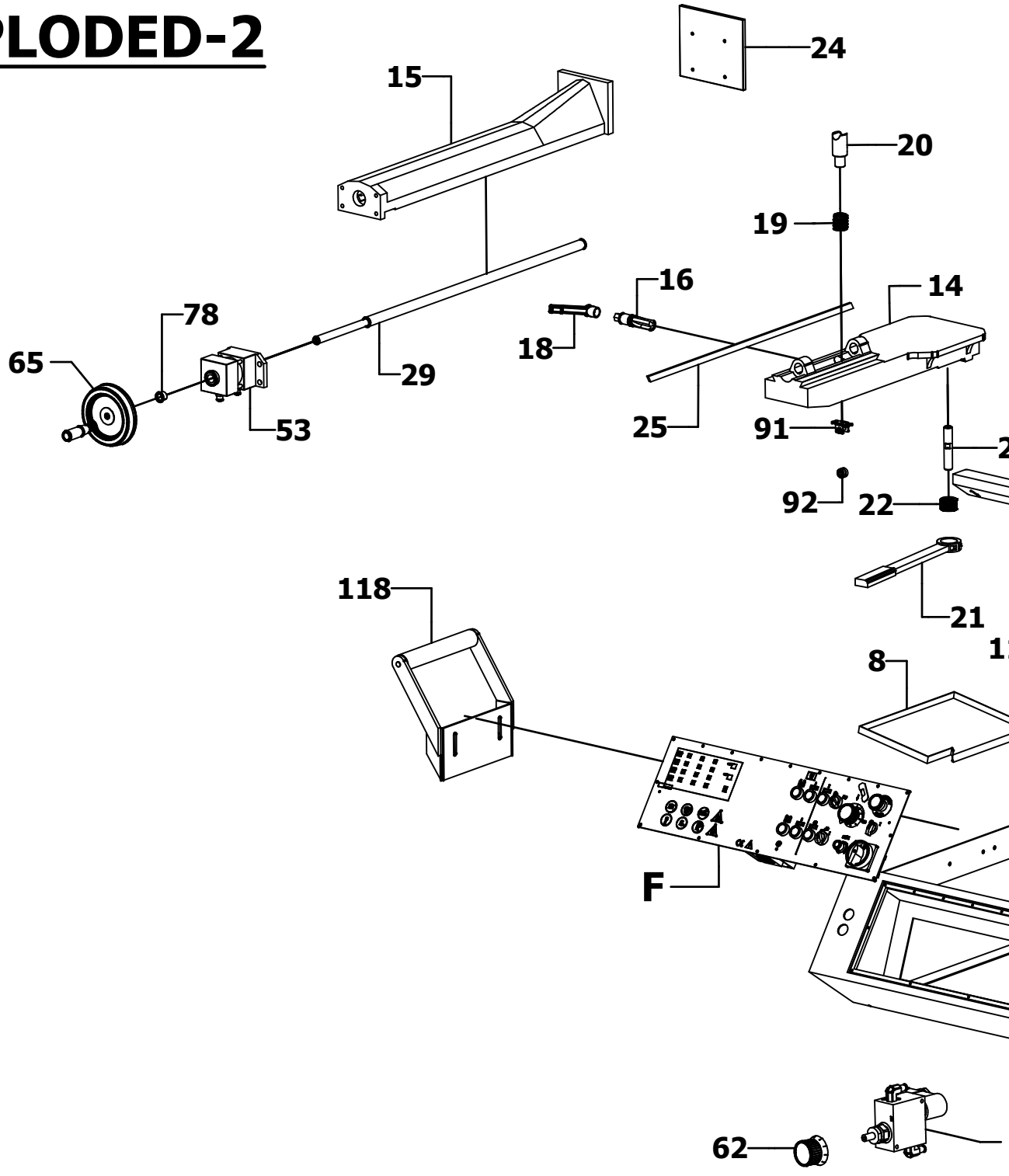

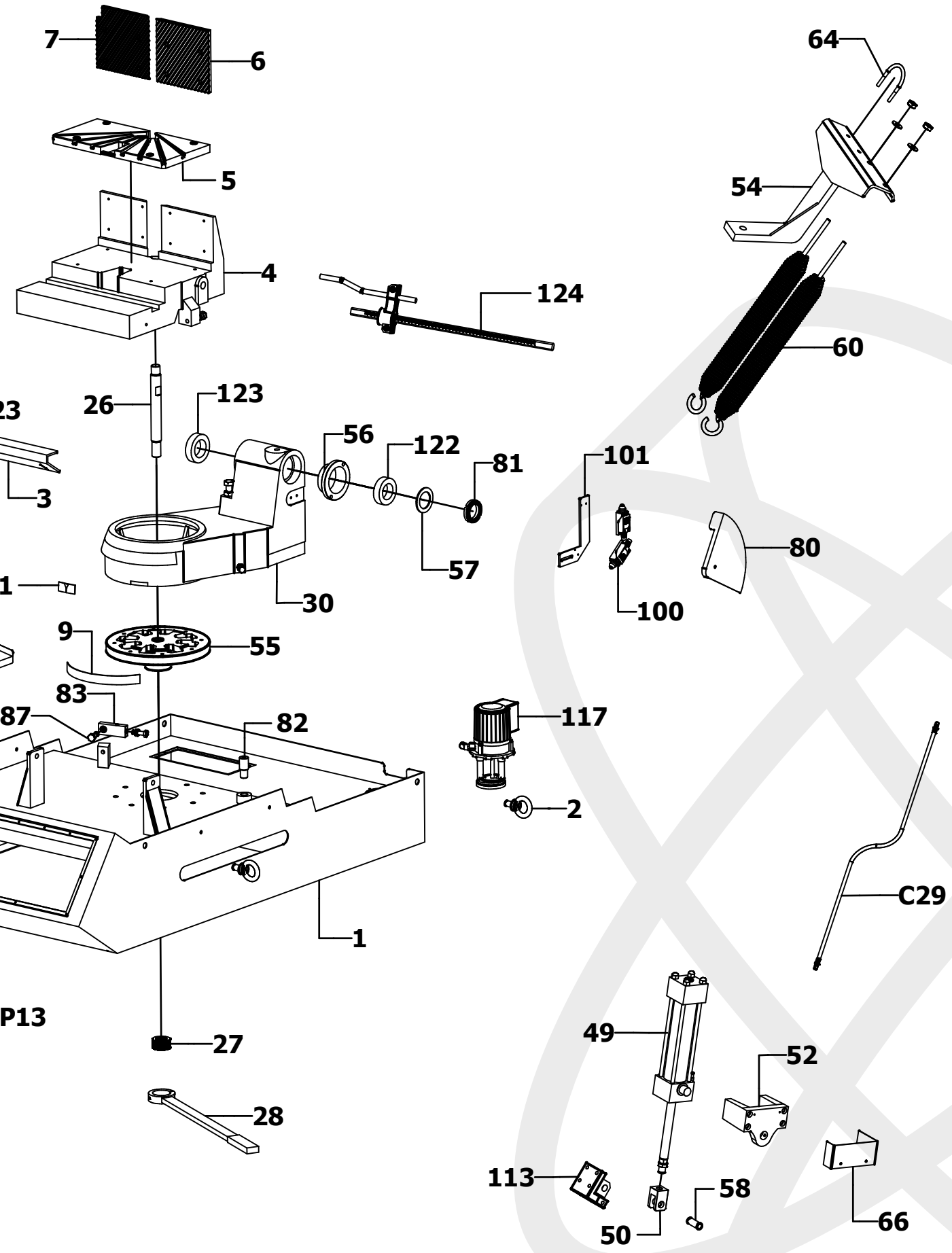

EGGENBERG
INDUSTRIAL TOOLS

EBS3770-A Hydraulic Unit

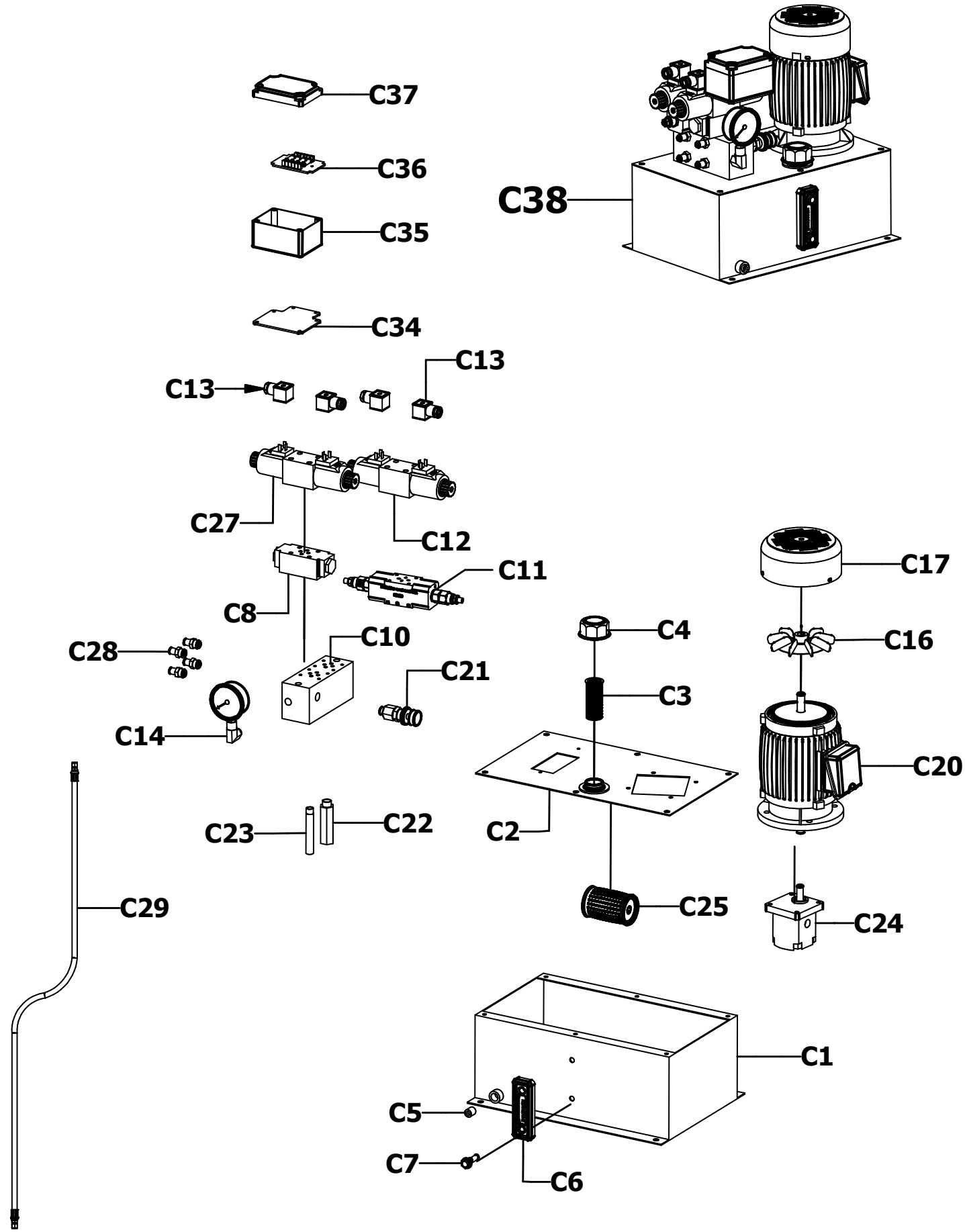

EGGENBERG
INDUSTRIAL TOOLS

NO	PARTS NAME	Q'ty
C1	HYDRAULIC BOX	1
C2	UPPER COVER	1
C3	FILTER COVER	1
C4	REFUEL	1
C5	LEAKING OIL BOLT	1
C6	OIL DISPLAY	1
C7	OIL DISPLAY SCREW	2
C8	JAKI	1
C10	VALVE BLOCK	1
C11	NEGATIVE VALVE	1
C12	LOW-PRESSURE CONTROL VALVE A	1
C13	CONNECT PLUG	1
C14	OIL PRESSURE GAUGE	1
C15	MOTOR	1
C16	FAN	1
C17	FAN COVER	1
C21	ADJUSTMENT BOLTS	1
C22	NEGATIVE VALVE	1
C23	ARRANGE PIPELINE	1
C24	HYDRAULIC PUMP	1
C25	FILTER NET	1
C26	NEGATIVE VALVE	1
C27	LOW-PRESSURE CONTROL VALVE B	1
C28	CONNECTOR HAND	4
C29	PIPELINE	5
C34	PLATE	1
C35	FUSE BOX	1
C36	PCB PLATE	1
C37	FUSE COVER	1
C38	**Hydraulic Unit**	1

EBS3770-A GEA

EXPLODED VIEW

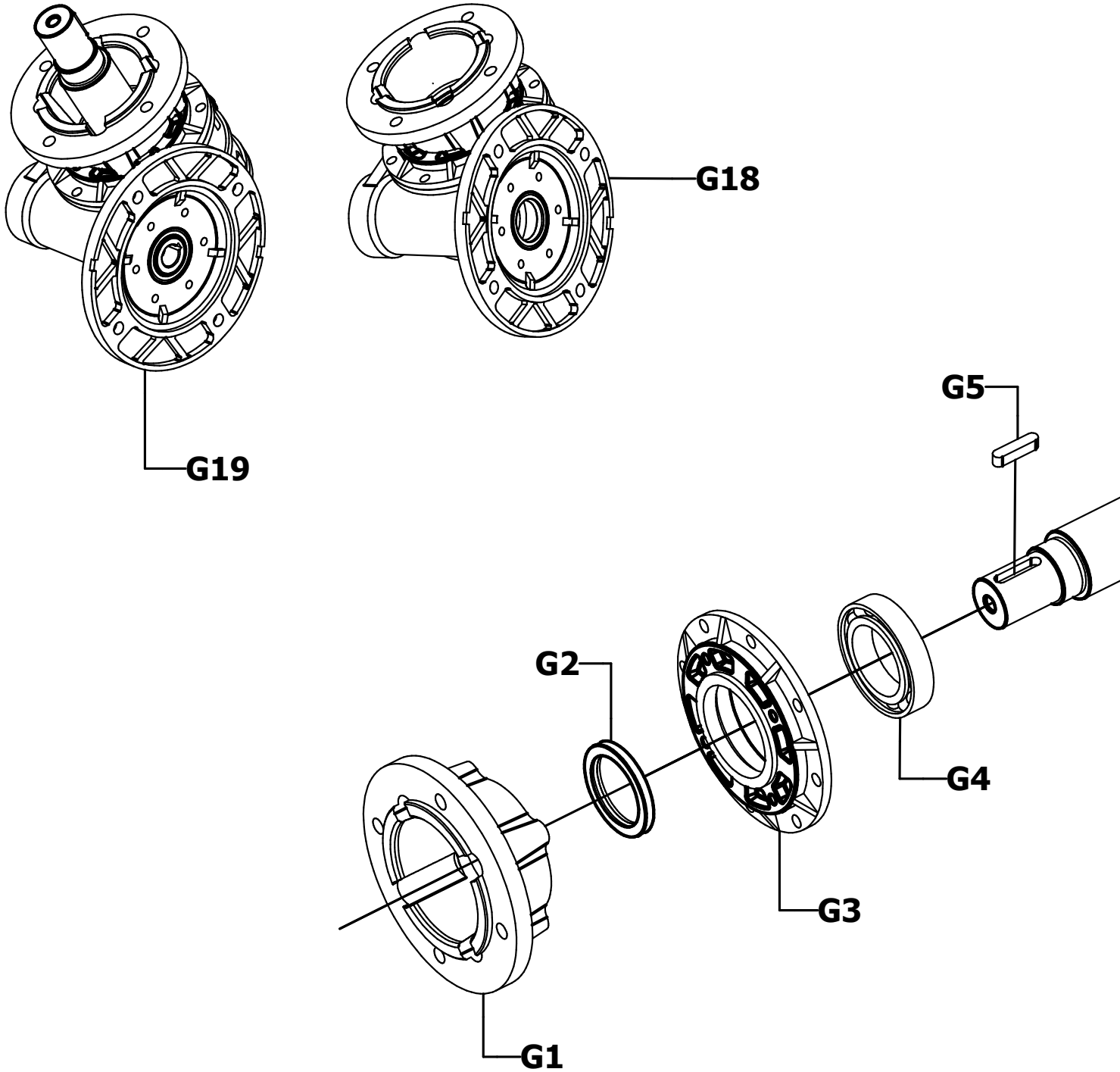

EGGENBERG
INDUSTRIAL TOOLS

AR

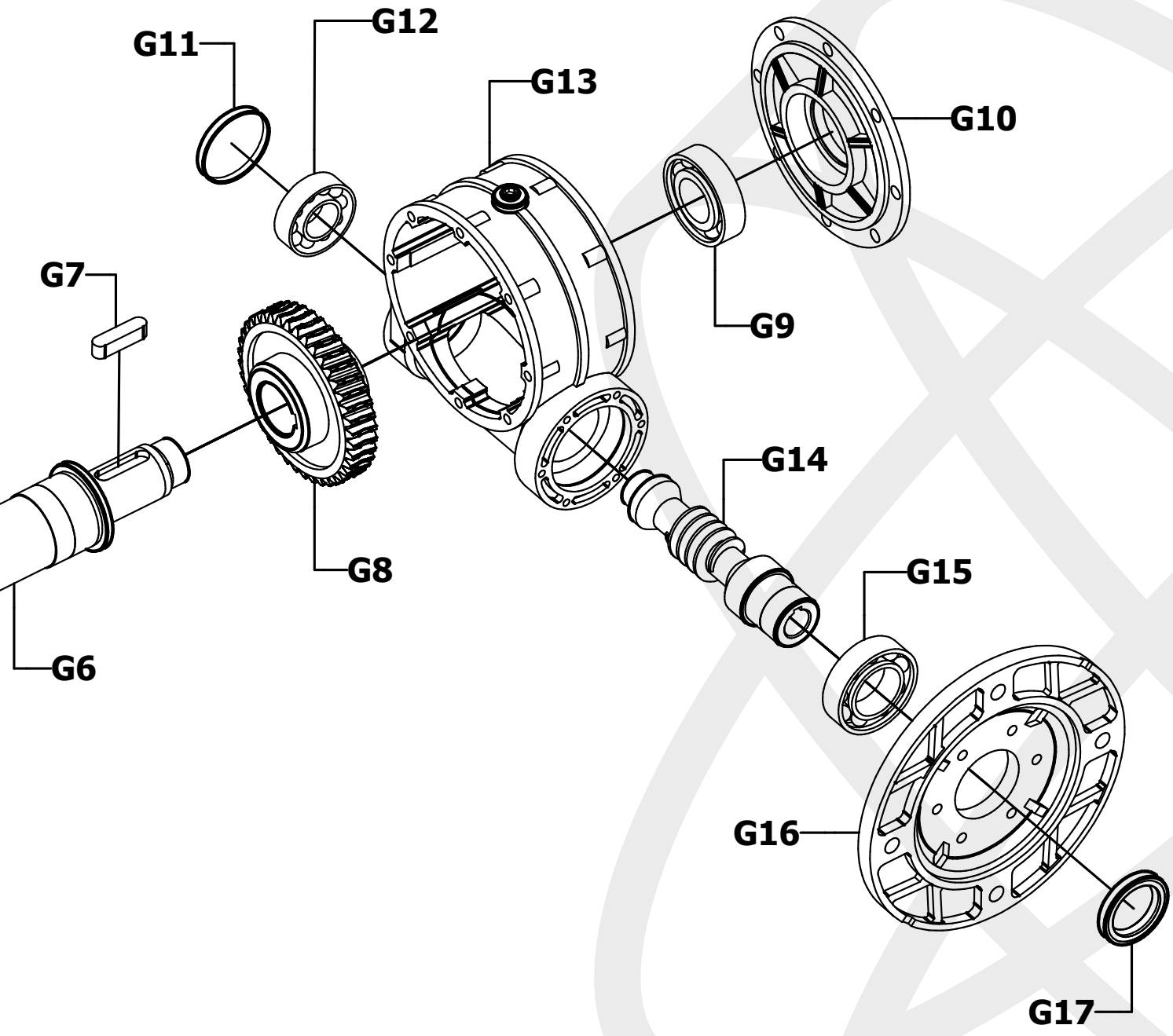

EBS3770-A INVERTER EXPLODED

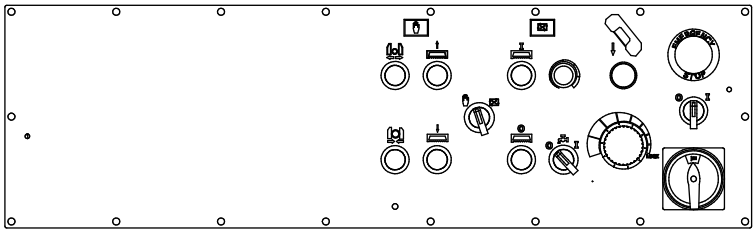

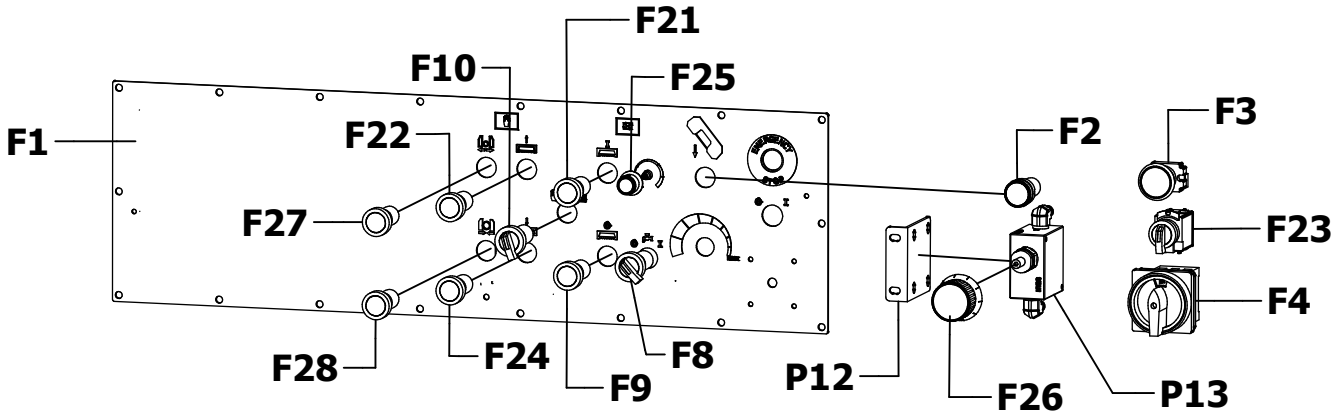

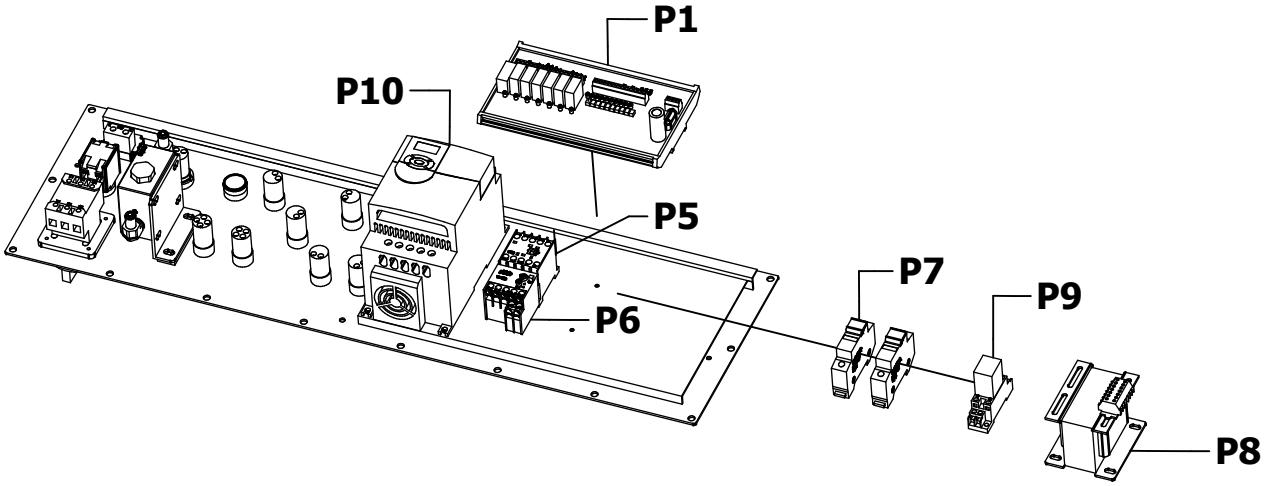

NO	PARTS NAME	NO	PARTS NAME
F1	FACE PLATE	F25	KNOB
F2	DOWN SWITCH	F26	KNOB
F3	EMERGENCY STOP	P1	PCB PLATE
F4	CAM SWITCH	P5	CONTACT
F8	PUMP SWITCH	P6	OVER RELAY
F9	OFF SWITCH	P7	FUSE
F10	H/A SWITCH	P8	TRANSFORMER
F21	ON SWITCH	P9	RELAY
F22	UP SWITCH	P10	INVERTER
F23	POWER SWITCH	P12	PLATE
F24	DOWN SWITCH	P13	VALVE BLOCK

Rexom fuse 16A
Power Supply
3 PH / 50HZ / 400V
LIMIT OF EQUIPMENT

ELECTRICAL CIRCUIT DIAGRAM
EBS3770-A-400INV AB

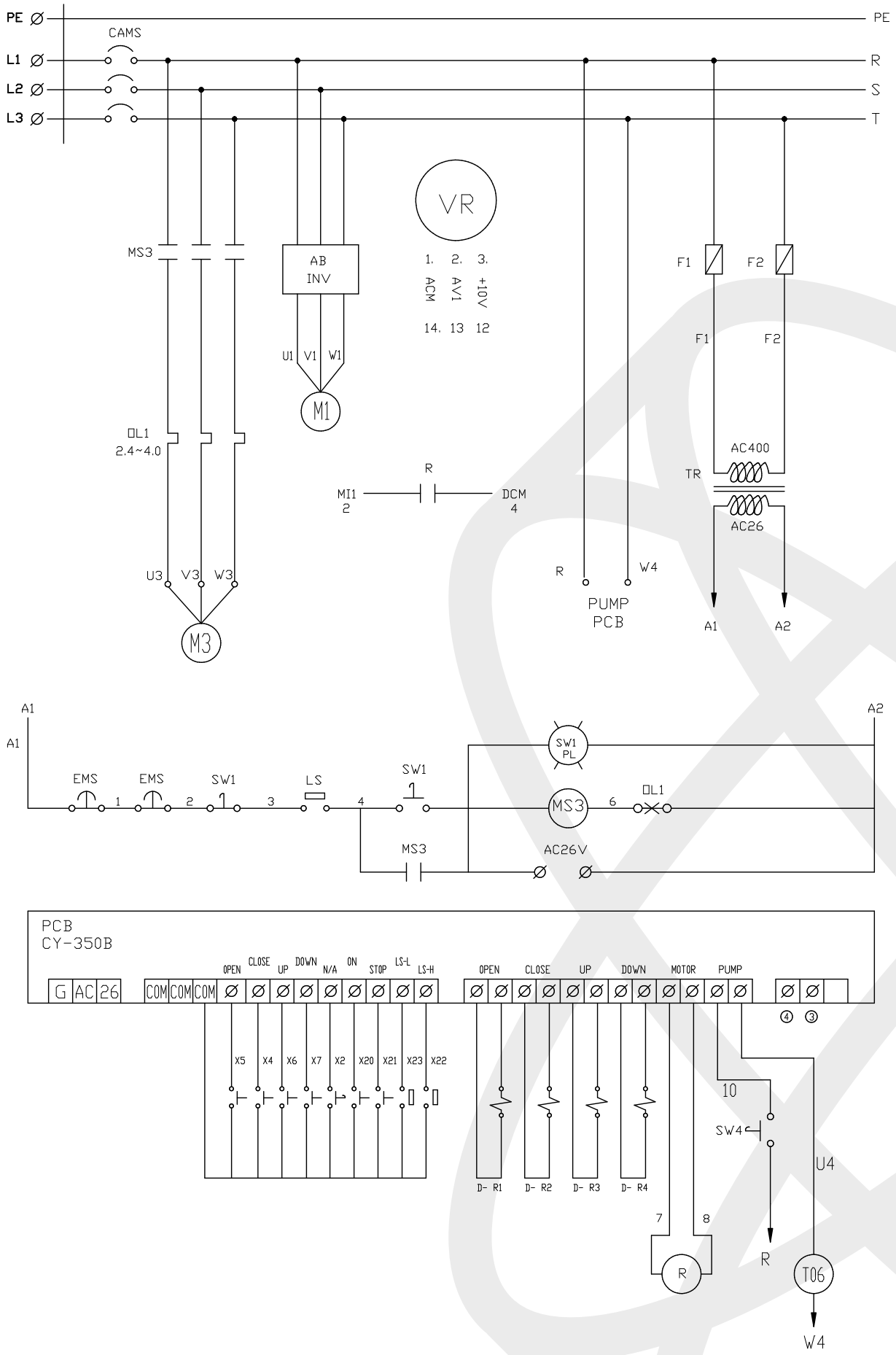

EBS3770-A STAND

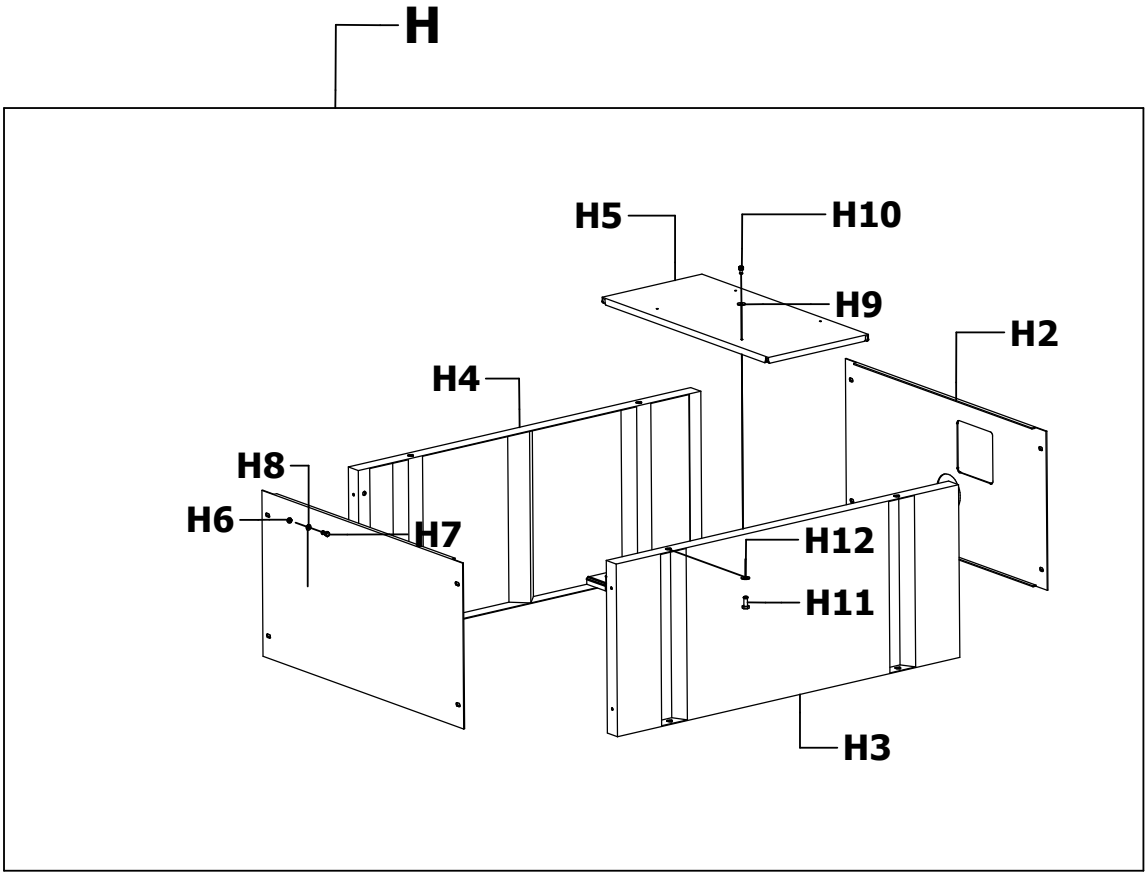

NO	PARTS NAME	Q'ty
H	stand	1
H1	stand (front)	1
H2	stand (rear)	1
H3	stand (L)	1
H4	stand (R)	1
H5	oil box base	1
H6	net (m8)	8
H7	screw m8	8
H8	washer	8
H9	washer	4
H10	screw (m6)	4
H11	screw (m10)	4
H12	washer	4

EBS3770-A PARTS LIST

NO	RARTS NAME	Q'ty	NO	RARTS NAME	Q'ty	NO	RARTS NAME	Q'ty
1	BASE	1	44	BLADE GUIDE -L	2	89	WATER PIPE	3
2	FLYING RING	4	45	SCREW M6*20	2	90	COOLANT DISTRIBUTER	1
3	WATER PLATE	1	46	BIG BRACKET	1	91	BERING PLATE	1
4	VISE BASE	1	47	BLADE GUIDE PLATE -L	1	92	BERING 608	2
5	VISE PIECE	1	48	PIVOT	1	94	BURSH	1
6	VISE JAW R	1	49	CYLINDER SEAT	1	96	NUT M30	1
7	VISE JAW L	1	50	CYLINDER NUT	1	97	BERING COVER	1
8	WATER PLATE	1	51	CYLINDER AXIS	1	98	WASHER	1
9	SCALE	1	52	CYLINDER BRACKET	1	99	SCREW M12	1
10	KEY	1	53	VISE CYLINDER	1	100	MICRO SWITCH	2
11	SCALE	1	54	REAR HOLDER	1	101	CUT & OFF PLATE	1
12	C-RING	4	55	ROUND SEAT	1	113	FIXED SEAT	1
13	BERING 608	4	56	BIAS CASE	1	114	MOTOR COVER	1
14	VISE SLIDING SEAT	1	57	BERING COVER	1	115	MOTOR FAN	1
15	VISE	1	58	PIN	1	116	MOTOR	1
16	VISE HANDLE BOLT	1	59	PLATE	1	117	COOLANT PUMP	1
17	MICRO SWITCH	1	60	SPRING	2	118	TRANSPORT SHELF	1
18	HANDLE	1	61	ADJUST OIL VALVE	1	120	BERING 6208	1
19	VISE SPRING	1	62	ADJUSTING BUTTON	1	121	BERING 32006	2
20	VISE NUT	1	64	U-SCREW	1	122	BERING 32009	1
21	VISE LEVER	1	65	HANDLE	1	123	BERING 32010	1
22	VISE MUT M20	1	66	HOLDER COVER	1	124	BAR STOP ROD	1
23	AXLE	1	67	WASHER	1	125	HANDLE	1
24	VISE JAW	1	68	BLADEGUARD	1	G1	FRONT FLANGE	1
25	KEY	1	69	BLOCK	1	G2	OIL SEAL(50*65*8)	1
26	PIN	1	70	FIXED HANDLE SEAT	1	G3	FLANGE	1
27	NUT	1	71	HANDLE	1	G4	BEARING 6010	1
28	HANDLE	1	72	NUT	1	G5	KEY(8*8*35)	1
29	VISE SCREW	1	73	BLADE TENSION	1	G6	GEAR SHAFT	1
30	REVOLVING ARM	1	74	SCREW M16	1	G7	KEY(10*10*40)	1
31	BODY FRAME	1	75	SHAFT	1	G8	TRANSMISSION	1
32	BLADE COVER	1	76	BERING §18	1	G9	BEARING 6010	1
33	SAW BLADE (34MM)	1	77	WATER PLATE	1	G10	COVER	1
34	REAR FLYWHEEL	1	78	BUSH	1	G11	OIL SEAL(52*7)	1
35	FRONT FLYWHEEL	1	79	PLATE	2	G12	BEARING 6205	1
36	BLADE GUIDE PLATE R	2	80	REVOLVING ARM COVER	1	G13	GEAR BOX	1
37	VALVE	1	81	NUT M45	1	G14	WORM GEAR	1
38	RUST PLATE	1	82	PIN	1	G15	BEARING 6007	1
39	BLADE COVER	1	83	BLOCK	1	G16	FLANGE	1
40	GUIDE PIVOT-L	2	84	BLADE TENSION GAUGE	1	G17	OIL SEAL(35*50*7)	1
41	GUIDE PIVOT-S	2	85	LEVER	1	G18	GEAR BOX	1
42	SMALL BRACKET	1	86	HANDLE	1	G19	GEAR BOX(UNIT)	1
43	BLADE GUIDE	2	87	SCREW	1			

TROUBLE SHOOTING

P: When the blade is not in a 90° angle (A)

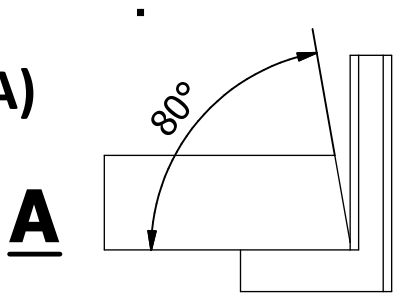

S: Replace your saw, so it makes a 90° angle (B)

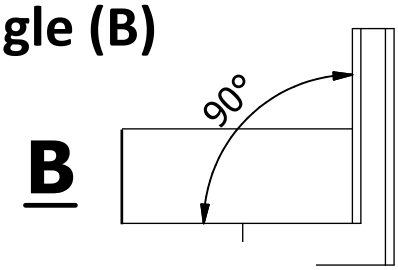

S: Inspect the blade guide plate if it is in a 90° (D1,D2,D3)

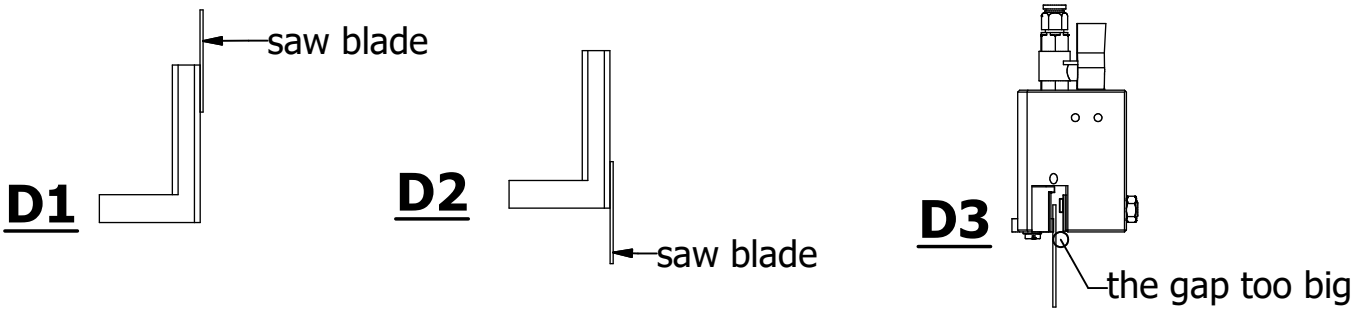

S: Use #32 to adjust the blade and set it 90°

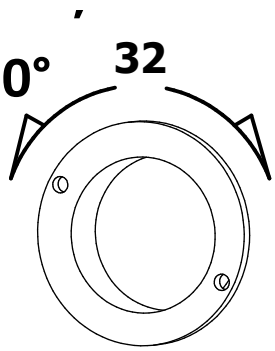

90° adjusting saw blade